Ejercicio 13 Guía 1 caso 1

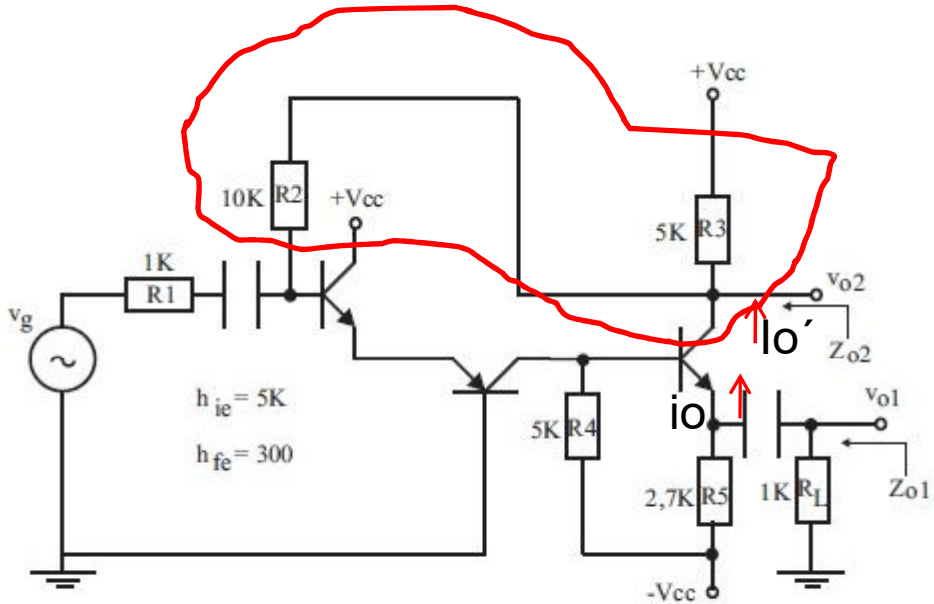

Figura 12: Ejercicio 13.

1- Determinar configuración

Paralelo - Serie

2 - Identificar red de realimentación

Parámetros [g]

3 – Ganancia requerida y adecuación de entrada de ser necesario

$$i_n = \frac{v_g}{1K} \qquad A_i = \frac{i_o}{i_n}$$

Ejercicio 13 Guía 1 caso 1

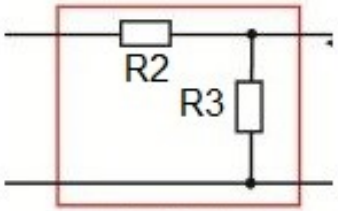

Red de realimentación

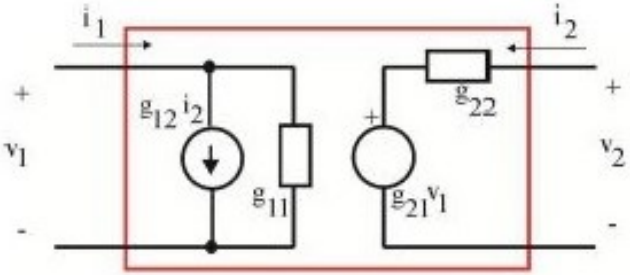

Red de realimentación

$$g_{11} = \left.\frac{i_1}{v_1}\right|_{i_2=0} = \frac{1}{R2 + R3}$$

$$g_{12} = \left.\frac{i_1}{i_2}\right|_{v_1=0} = -\frac{R3}{R2 + R3}$$

$$g_{21} = \left.\frac{v_2}{v_1}\right|_{i_2=0} = \frac{R3}{R2 + R3}$$

$$g_{22} = \left.\frac{v_2}{i_2}\right|_{v_1=0} = \frac{R2\ R3}{R2 + R3}$$

Ejercicio 13 Guía 1 caso 1

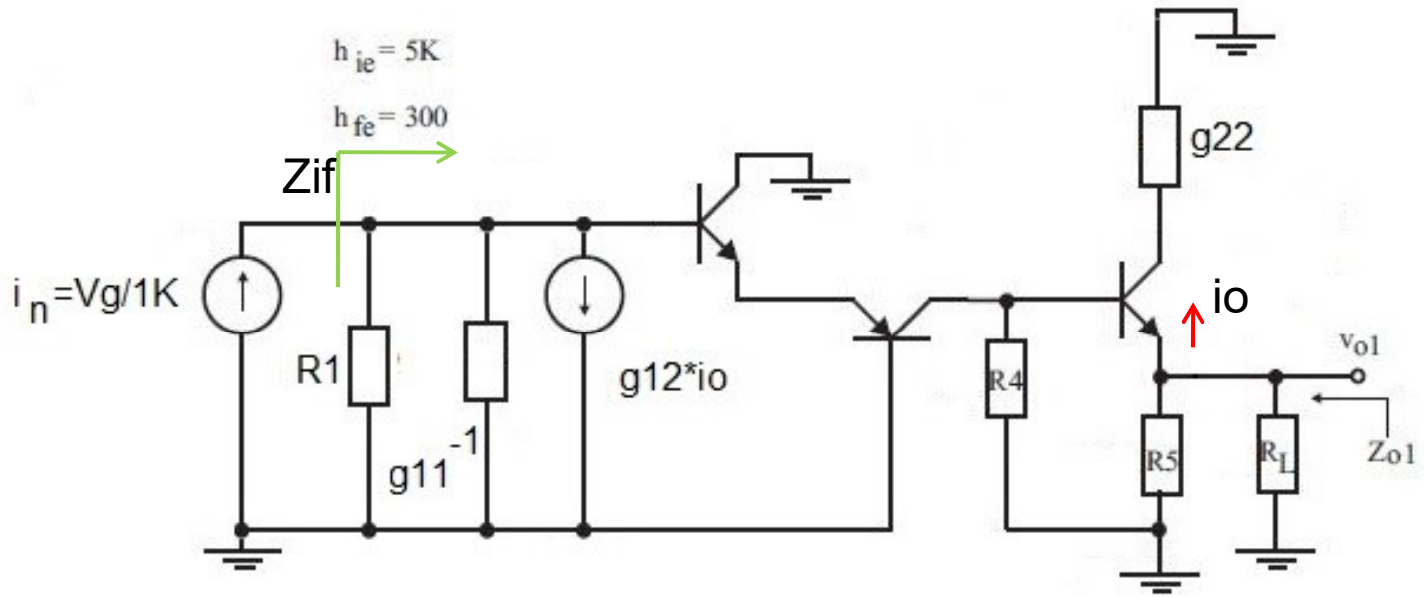

$$a_i = \frac{i_o}{i_n}, \qquad con\ g_{12} = 0 \qquad A_i = \frac{i_o}{i_n} = \frac{a_i}{1 + a_i g_{12}} \qquad Z_{if} = \frac{Z_{io}}{1 + a_i g_{12}}$$

$$Z_{io} = R_1 \left|\left| g_{11}^{-1} \right|\right| (2h_{ie}) \qquad A_v = \frac{v_{o1}}{v_g} = \frac{-i_o R_5 || R_L}{i_n 1K} = -A_i \frac{R_5 || R_L}{1K}$$

Ejercicio 13 Guía 1 caso 1

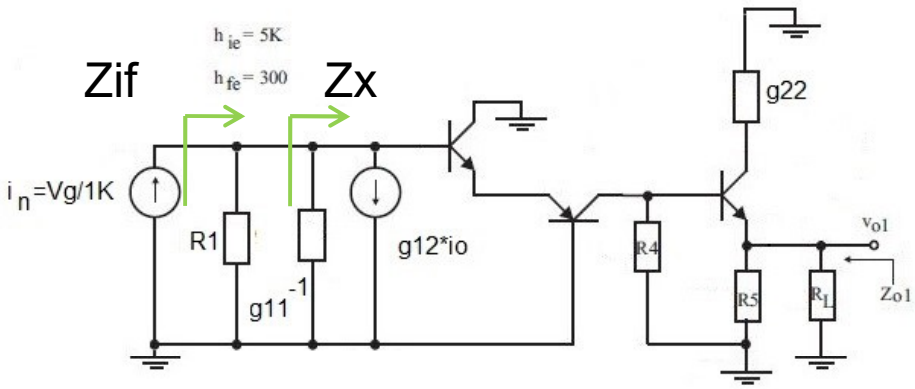

$$Z_{if} = R_1 || Z_x$$

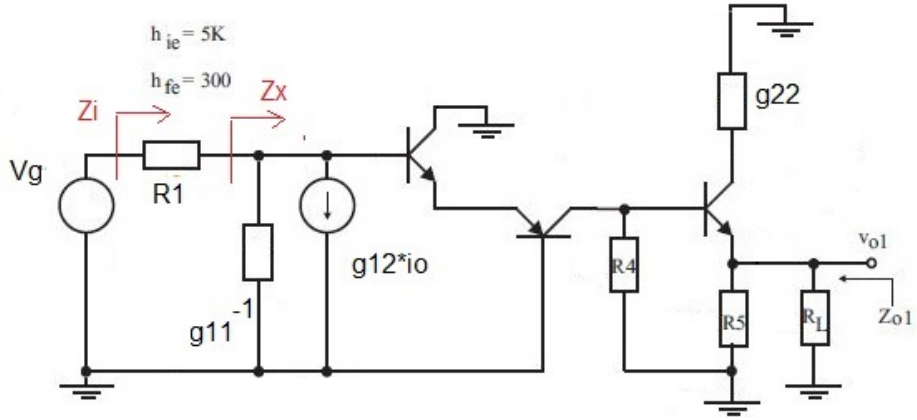

$$Z_i = R_1 + Z_x$$

Ejercicio 13 Guía 1 caso 1

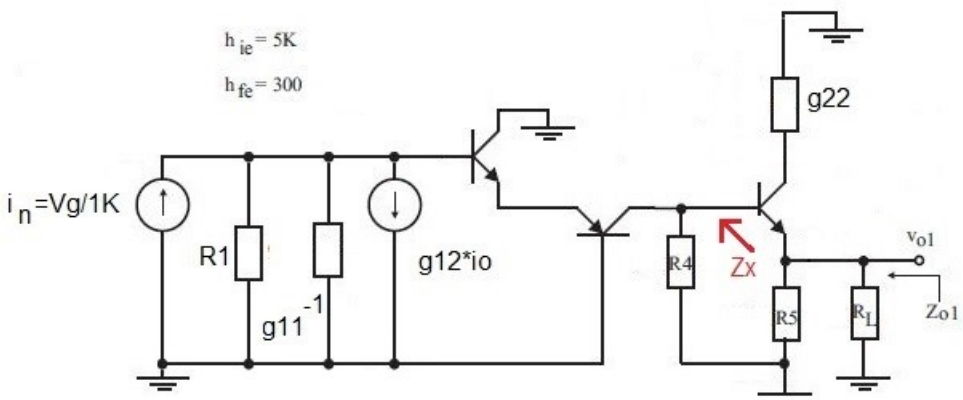

$$Z_{01} = R_5||R_L||Z_x$$

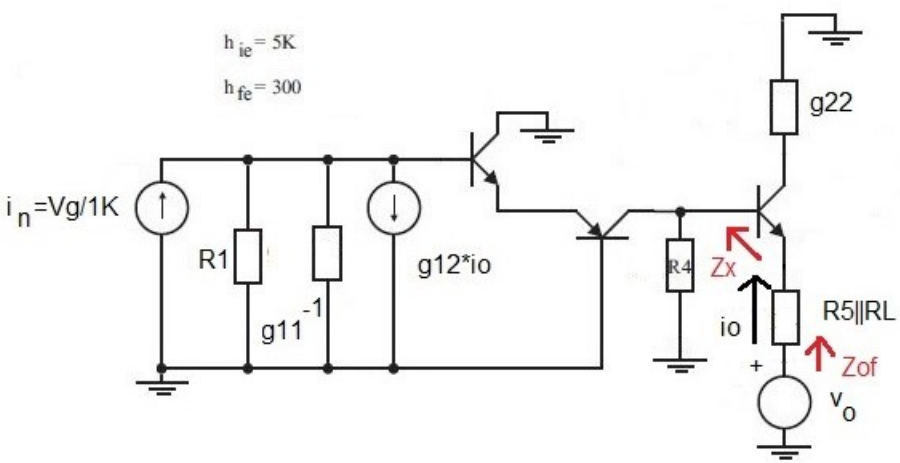

$$Z_{00} = R_5||R_L + \frac{h_{ie} + R_4}{h_{fe} + 1}$$

$$Z_{of} = Z_{oo}(1 + a_i g_{12})$$

$$Z_{of} = R_5||R_L + Z_x$$